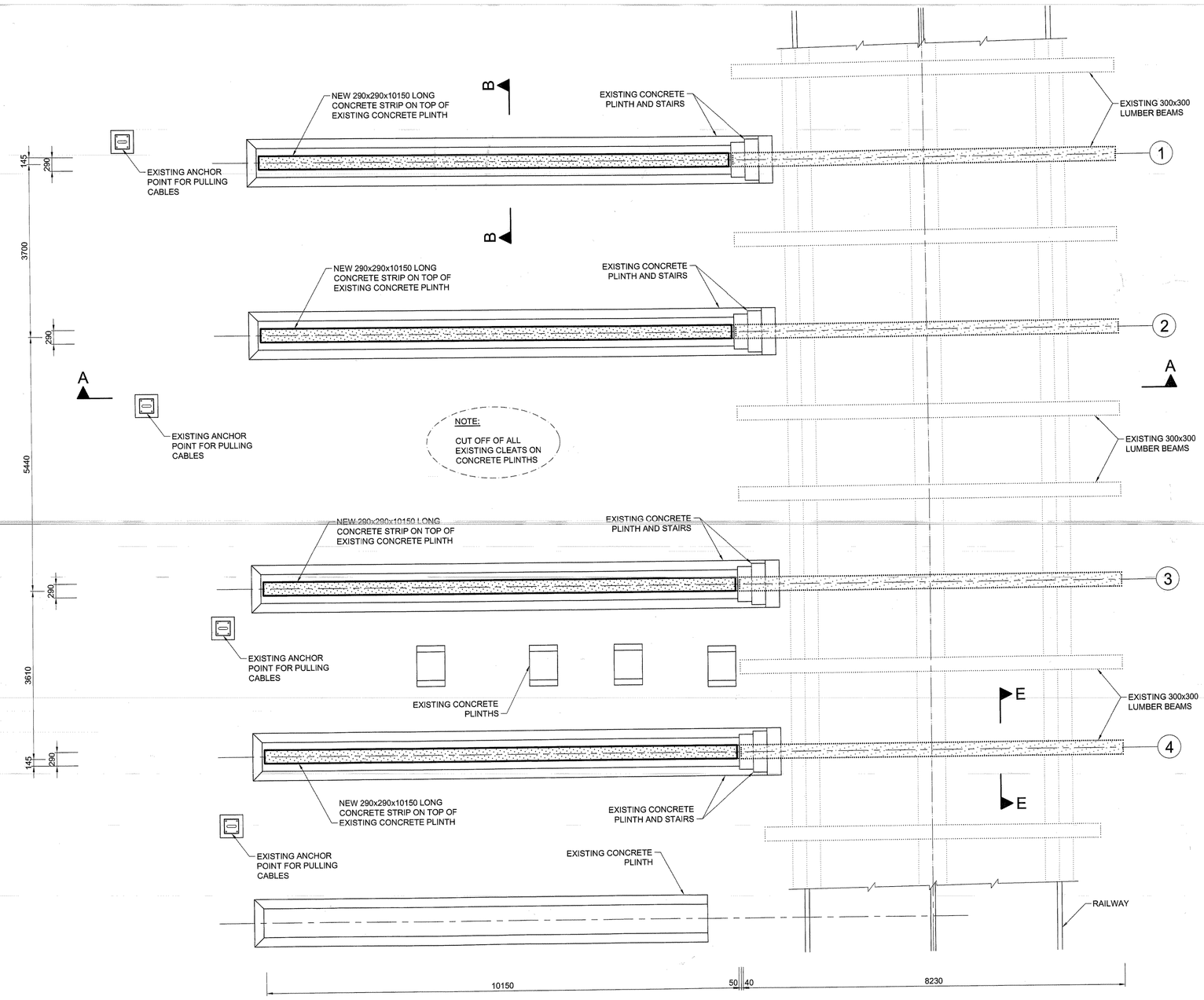

PLAN : SIDE SLIP AND SLIPWAY
SCALE 1:50

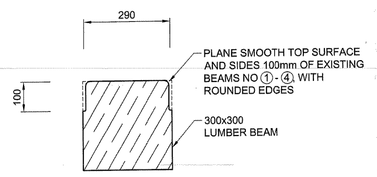

SECTION E-E
SCALE 1:10

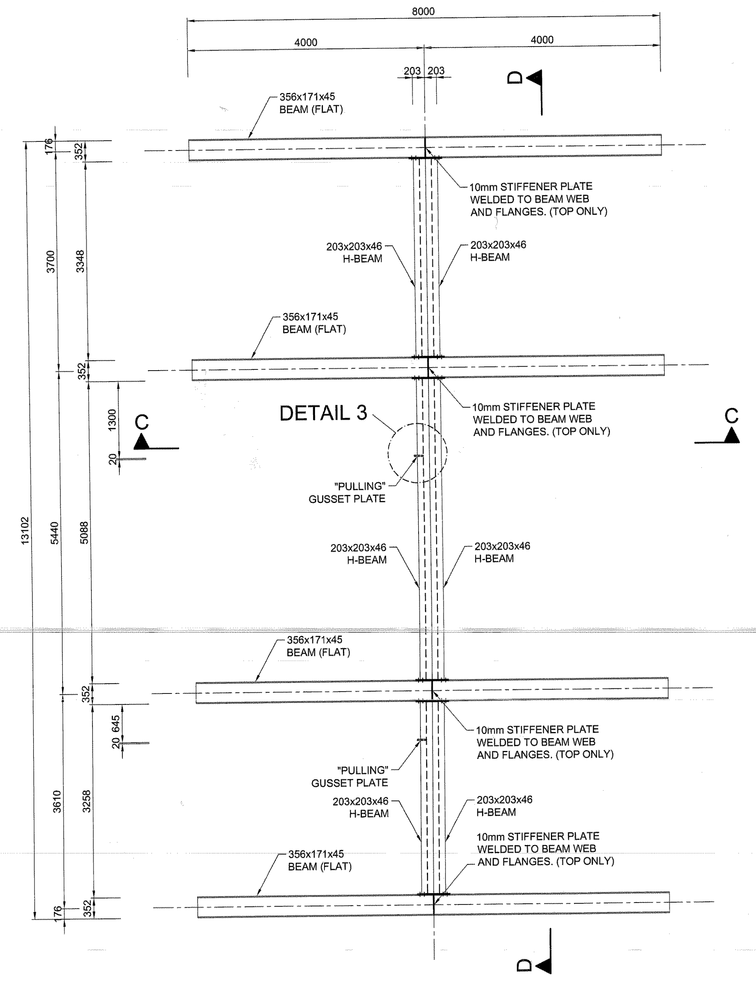

PLAN : CRADLE
SCALE 1:50

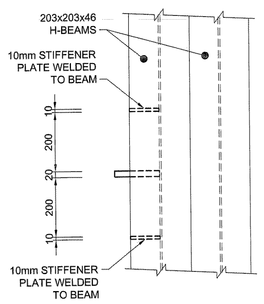

DETAIL 3 : PLAN
SCALE 1:10

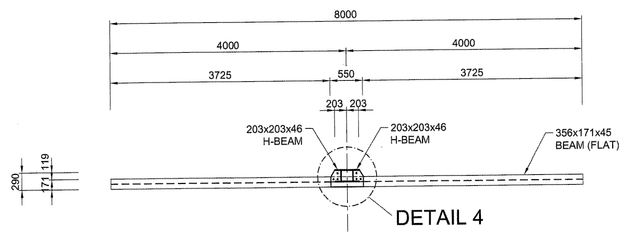

SECTION C-C
SCALE 1:50

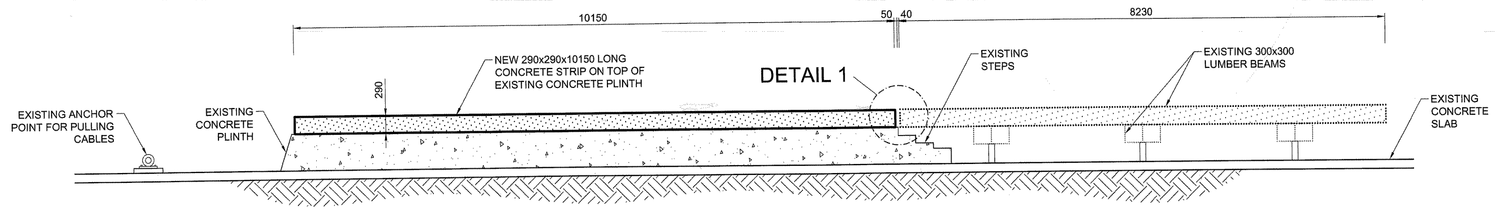

SECTION A-A
SCALE 1:50

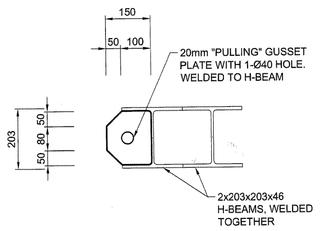

DETAIL 3 : ELEVATION
SCALE 1:10

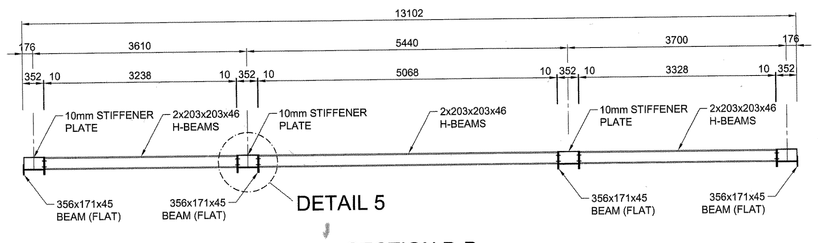

SECTION D-D
SCALE 1:50

NOTE:

1) CONCRETE 30MPa AT 28 DAYS
2) ALL REBAR HOT DIPPED GALAVANISED TO SANS 121 (ISO 1461)
3) COVER TO REBAR 40mm
4) TOTAL MASS OF REBAR = 176kg

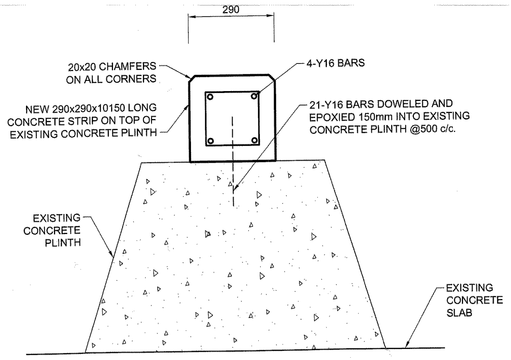

SECTION B-B
SCALE 1:10

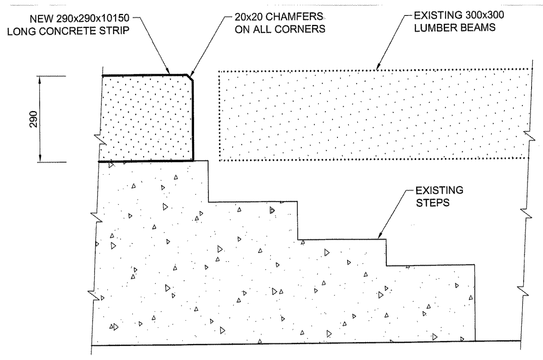

DETAIL 1
SCALE 1:10

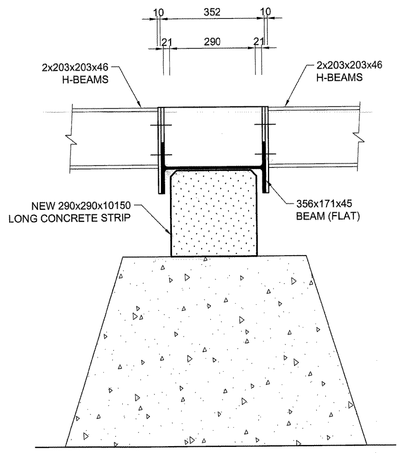

DETAIL 2 : CRADLE ON CONCRETE STRIP
SCALE 1:10

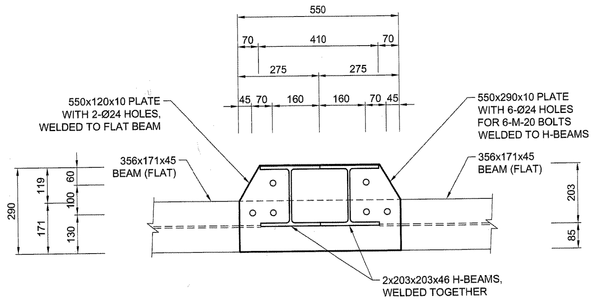

DETAIL 4
SCALE 1:10

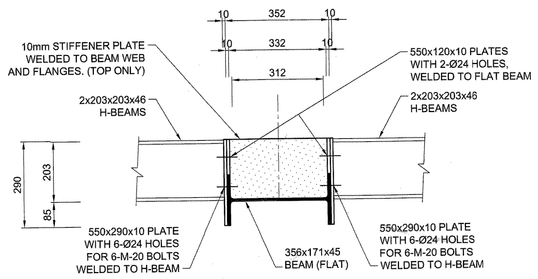

DETAIL 5
SCALE 1:10

(A)	VOOR KONTRAK IN AANVANG NEEM BEFORE CONTRACT COMMENCES
(A)	NA KONTRAK IN AANVANG GENEEM HET AFTER CONTRACT HAS COMMENCED

Nr. No.	DATUM DATE	WYSIGINGS AMENDMENTS

OUTEURSREG IS GEVESTIG IN MVD SUID-KAAP KRAGTENS DIE WET OP OUTEURSREG (WET 98 VAN 1978)

COPYRIGHT IS VESTED IN MVD SOUTH-CAPE IN TERMS OF THE COPYRIGHT ACT. (ACT 98 OF 1978)

TRANSNET
PORT OF MOSSEL BAY

MVD Raadgewende Ingenieurs (Suid Kaap) (Edms) Bpk.
Reg. No. 2001/008810/07
CESA Raadgewende Siviele en Strukturele Ingenieurs
Consulting Civil and Structural Engineers
■ MOSSELBAAI POSBUS/P.O. BOX 730. TEL. (044) 6912305
□ GEORGE POSBUS/P.O. BOX 1889 TEL. (044) 8746517

PROJEK / PROJECT
MOSSEL BAY HARBOUR : SIDE SLIP

TEKENING BESKRYWING / DRAWING DESCRIPTION
CRADLE DETAILS

TEKENING NR. / DRAWING NO.
M1894

SKAAL SCALE	AS SHOWN	NAGEGAAN CHECKED	
DATUM DATE	28 SEPTEMBER 2010	GETEKEN DRAWN	EDUARD COETZEE
CAD NAAM CAD NAME	Side Slip, Mossel Bay, M1894		